慈溪市万捷电子有限公司
CIXI WANJIE ELECTRONIC CO., LTD

产品规格书
THE SPEC SHEET

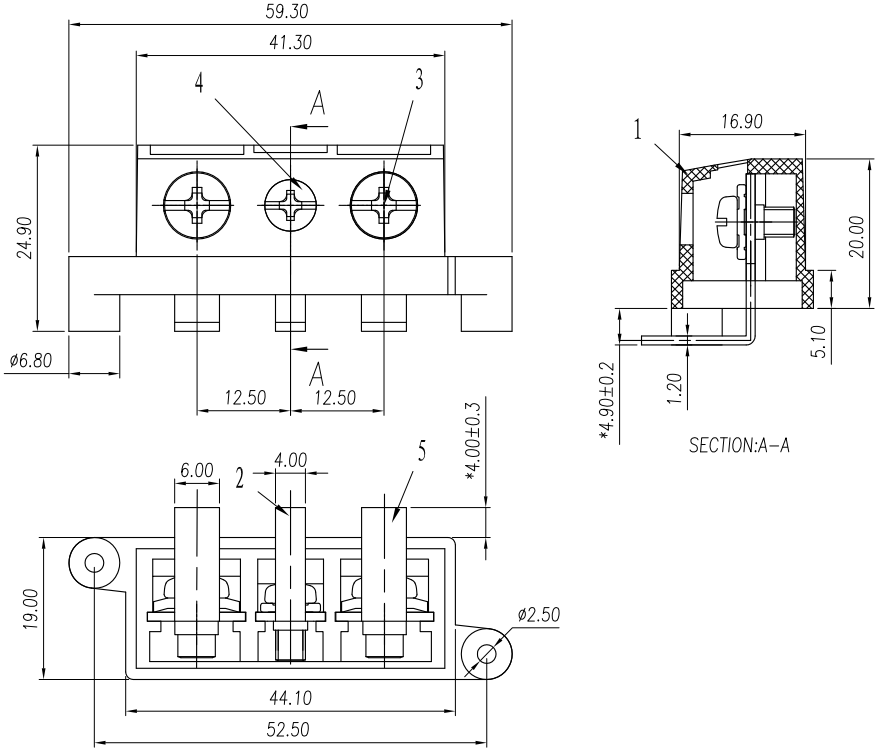

参考标准/Standard	UL	IEC
额定电压/Rated voltage	150V	250V
额定电流/Rated current		
长焊脚/Pin header	20A	24A
短焊脚/Pin header	30A	32A
绝缘电阻/Insulation resistance	500MΩ/DC500V	
使用线径/Wire range		
长焊脚/Pin header	22~12AWG(UL)	2.5mm²(IEC)
短焊脚/Pin header	22~10AWG(UL)	4.0mm²(IEC)
耐 电 压/Wrth standing voltage	AC 2000V/1 Min	
机 械 性 能/Mechanical		
温度范围/Temp.Range	-40°C~+105°C	
尺 寸/Dimensions		
间 距/Pitch	12.5mm	
极 数/Poles	3p	
材 质 及 电 镀/Material		
塑 件/Housing	PA66，UL94V-0	
螺 丝/Screws	M4 Steel, imitation gold plated M5 Steel, imitation gold plated	
焊针/Pin header	Brass,imitation gold plated	

	linear dimension(Tolerances Standard GB/T 14486–2008)											⌯	—	▱	//	⊥
variable range	to 6	over 6 to 10	over 10 to 18	over 18 to 30	over 30 to 50	over 50 to 80	over 80 to 120	over 120 to 160	over 160 to 200	over 200 to 250	over 250 to	all	to 5	over 5 to 30	over 30 to 120	over 120 to
tolerance	±0.1	±0.14	±0.19	±0.25	±0.32	±0.43	±0.57	±0.72	±0.88	±1.05	±1.25	0.5	0.025	0.06	0.12	0.4

单位/UNITS	mm	尺寸/SIZE	A4	比例/SCALE	1:1
慈溪市万捷电子有限公司 CIXI WANJIE ELECTRONIC CO., LTD					第三视角/THIRD ANGLE PROJECTION
				名称/TITLE	EM-51H-03P-1YY-00B