慈溪市万捷电子有限公司
CIXI WANJIE ELECTRONIC CO., LTD

产品规格书
THE SPEC SHEET

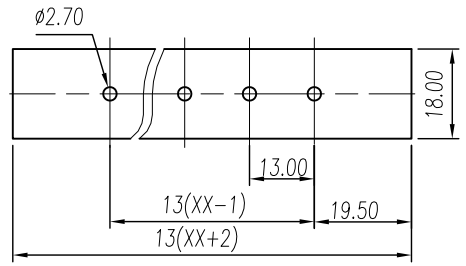

P.C.B. LAYOUT

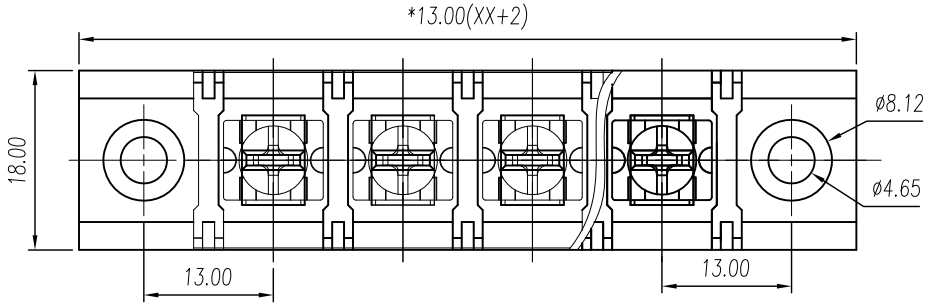

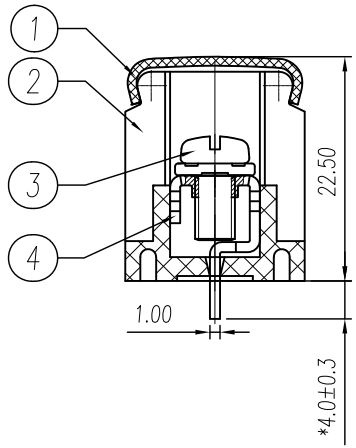

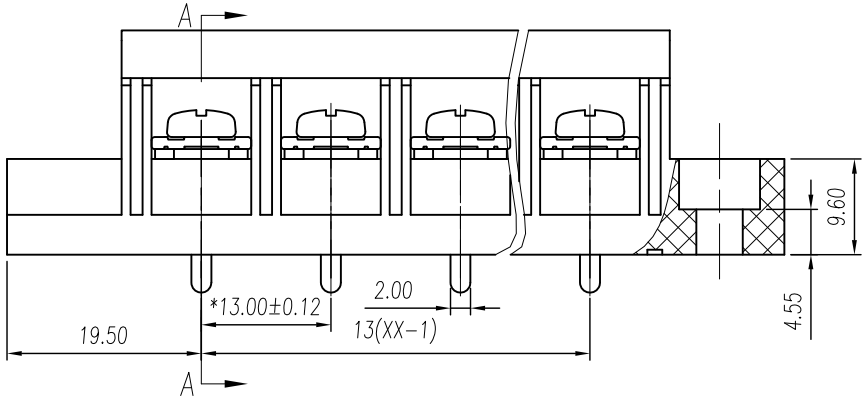

电 气 性 能/Electrical

参考标准/Standard	UL	IEC
额定电压/Rated voltage	600V	750V
额定电流/Rated current	30A	32A
接触电阻/Contact resistance	20mΩ	
绝缘电阻/Insulation resistance	500MΩ/DC500V	
使用线径/Wire range	18~10AWG	4.0mm²
耐 电 压/Wrth standing voltage	AC 2000V/1 Min	

机 械 性 能/Mechanical

扭　　矩/Torque	1.2Nm(10.6Lb.in)
温度范围/Temp.Range	-40°C~+105°C
瞬时温度/MAX Soldering	+250°C, for 5 Sec

尺　寸/Dimensions

间 距/Pitch	13mm
极 数/Poles	2~20p

材 质 及 电 镀/Material

塑 件/Housing	PA66，UL94V-0
螺 丝/Screws	M4.0 Steel Ni plated
焊 脚/Pin header	Brass 1.0t Tin plated
盖板/Cover	PC,UL94V-2

	linear dimension(Tolerances Standard GB/T 14486-2008)											≡	—	▱	//	⊥
variable range	to 6	over 6 to 10	over 10 to 18	over 18 to 30	over 30 to 50	over 50 to 80	over 80 to 120	over 120 to 160	over 160 to 200	over 200 to 250	over 250 to	all	to 5	over 5 to 30	over 30 to 120	over 120 to
tolerance	±0.1	±0.14	±0.19	±0.25	±0.32	±0.43	±0.57	±0.72	±0.88	±1.05	±1.25	0.5	0.025	0.06	0.12	0.4

单位/UNITS	mm	尺寸/SIZE	A4	比例/SCALE	4:3
慈溪市万捷电子有限公司 CIXI WANJIE ELECTRONIC CO., LTD				第三视角/THIRD ANGLE PROJECTION	
				名称/TITLE	WJ78CM-XXP-1YY-00A